MTS SENSORS GROUP

Magnetostrictive Position Sensors

Temposonics® R-Series
Interbus-S

Instruction Manual

Interbus-S Interface

Option I 202
Multi-Position Measurement

ISO 9001 CERTIFIED

CE

Profile + Rod Models **RP/RH**

MTS Sensor Technologie
GmbH & Co. KG
Auf dem Schüffel 9
D-58513 Lüdenscheid

Tel.: +49 2351 9587-0
Fax: +49 2351 56491
eMail: info@mtssensor.de
www.mtssensor.de

BetrAnl/Tempo-Rserie/interbus-202e

Preface

The general safety instructions given below are intended to ensure the personnel safety and to avoid damage. Temposonics are state-of-the-art position measurement systems built in accordance with the standard safety regulations. Nevertheless, hazards to the life and health of the user or other persons, or impairments of the sensor or other objects may arise in conjunction with the use of Temposonics Sensors.

Application

1. The position measurement systems of all series Temposonics may be used only for the purposes for which they were designed, i.e. they may be used exclusively for measurement tasks in industrial, commercial and laboratory applications. E.g. positions, displacements and speeds can be measured (more detailed information is given in the relevant product documentation). The position sensors are accessories of an installation and must be connected to a suitable evaluating unit as included in a PLC, IPC, indicator or other electronic control unit. Correct use for the intended purpose implies that all instructions given in the product documentation are followed. Using sensor Temposonics beyond these limits is incorrect. MTS Sensor Technologie GmbH & Co. KG refuse any liability for damage resulting from incorrect use.

2. The displacement sensors may be used only in safe condition. In order to maintain this condition and to ensure safe operation, installation, connection and service work may be done only by trained and qualified personnel *), whereby the relevant instructions for accident prevention and safety as well as the information given in the product documentation must be followed.

Functional trouble

Hazards to the safety of persons or risks of damage to operating facilities due to sensor failure or malfunction must be avoided by additional safety measures such as plausibility checks, limit switches, emergency off systems, protective devices, etc.
In case of trouble, the sensor must be shut down and protected against accidental operation.

Repair

Repair of the sensor may be done only by MTS or an explicitly authorized organization.

Installation and operation

To ensure perfect functioning, following the information given below is indispensable:

1. Protect the sensors against mechanical damage during installation and operation.
2. Do not open or dismantle the sensors.
3. Connect the sensors with utmost care related to polarity of connections, supply voltage as well as type and duration of control pulses.
4. Use only approved power supplies.
5. Meeting the permissible sensor limit values e.g. for supply voltage, environmental conditions etc. specified in the product documentation is indispensable.
6. Check the correct function of the position sensors at regular intervals and provide test documentation.
7. Before switching on the installation, ensure that the starting machine does not threaten the safety and health of persons.

***) Trained personnel means persons who**

- related to projecting, are familiar with the safety concepts of automation,
- are informed of the electromagnetic compatibility,
- have received a special training for commissioning and servicing,
- are familiar with the operation of the unit and informed of the specifications for correct operation given in the product documentation.

Temposonics R-Series, *Interbus-S / I 202*

Function

Measuring Principle

Temposonics are highly repeatable position sensors for measuring linear movements. Their absolute nature provides instant recognition of machine position after power loss recovery. Using the unique magnetostrictive principle, which MTS pioneered, the sensor precisely senses the position of an external magnet through the housing wall to measure displacements with a high degree of resolution. This time-based method with up to 10'000 measurements/second provides sensors of highest accuracy. The non-contact sensing eliminates the wear, noise and erroneous signal problems and guarantees the best durability.

Bus Features

INTERBUS is a vendor independent, open fieldbus standard (EN 50254/DIN E19258). The bus structure (ring topology) is designed for data transmission at machine level. Here, the central controller (e.g. PLC/PC) communicate with the distributed field devices (sensors, actors etc.). Data transfer is determined via a shift register as a high speed serial link. The open PC architecture of INTERBUS - with a wide variety of certified products, ensuring easy operation in PLC systems without imperatively programming the master. INTERBUS, as international bus, based on OSI reference model (ISO 7498), provides following performance:

Bus structure. Ring topology.
Bus type. Installation Remote Bus, stub-lines for data transfer and power supply with remote bus gate (e.g. supplier Phönix).
Participants. 400 segments with 512 devices totally (Max. 8 devices per segment) for Interbus-S remote bus.
Cable. 9 leads installation remote bus cable, twisted pairs.
Max. length of bus line. 50 m.
Data transmission. Digital, serial, bitsynchronous, RS485 standard, electrical isolation.
Baud rate. 500 kBit/s.
Bus access. Master-Slave
Communication. Cyclic "Summenrahmen" telegrams.
Functionality. Parameter and data exchange, Cyclic process data transfer, non-cyclic parameter transfer, ID-Cycle for autoconfiguration or bus controlling, diagnostics, fault breakdown.
Synchronization. The "Summenrahmen" protocol is responsible for a synchronized bus communication.
Security and protection. CRC check at each participant, configurable monitoring timer.

INTERBUS-S technology is controlled and administrated by the INTERBUS-S Club.

Sensor Features

Fieldbus systems require local itelligence for additional functions (e.g. configuration, diagnostics, alarm etc.) at the machine level. The 'smart' R-Series INTERBUS-S sensors, with sensor-based intelligence convert the displacement measurements - proportional to the magnet position - into bus oriented, standardized outputs and transfer these data directly to the controller. The sensors are set as slaves. Configuration and di-agnostics can be done by the master. Temposonics sensors provide the following features: **Sensor outputs.** Absolute position of 16 magnets maximum, Sensor status and error detection.
Data transmission. Asynchronous.
Selectable parameters. Null position: Offset and preset, Measuring direction: forward and reverse acting, Resolution: 0,005 mm up to >0,5 mm.
Operation mode indication. 4 pcs. diagnostic LED's, placed on connector side (see right)
UL (green): 24 Vdc turned on
BA (green): Bus activ
CC (green): Cable controlled
RD (red): Remote-Bus switch off

Here: 1-Magnet Position measurement (Standard). 32 bit: Position 24 bit, controller and status 8 bit.
Multiple position measurement (Option). Positions of 1 - 16 selectable magnets on 1 sensor are detected, 64 bit Data frame for: Transfer of 3 selectable magnet positions with 16 bit each, and 16 bit for controller and status in one data cycle, 5 data cycles for transmission of 15 magnet positions, 100 mm distance between the magnets minimum.
Input voltage. From Installation Remote Bus 18 - 36 Vdc, Power consumption: < 3 Watt
Sensor connector. 2 pcs. of 9 pin metal connector M23 (INTERBUS standard).
Certification No. 221. Certified by Interbus-S Club after conformance test of Fraunhofer

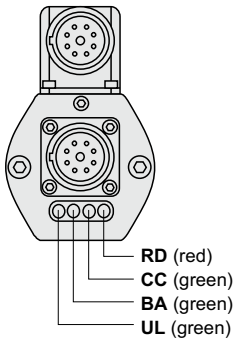

Ring topology INTERBUS

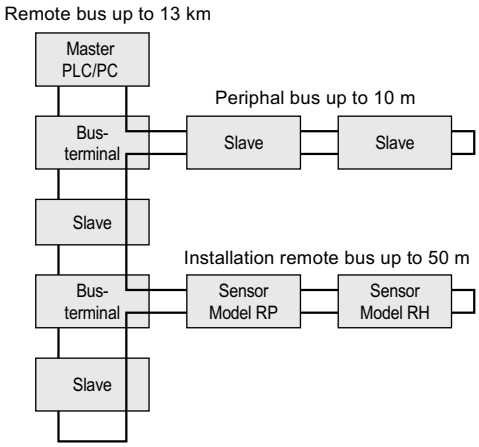

Logic Diagram

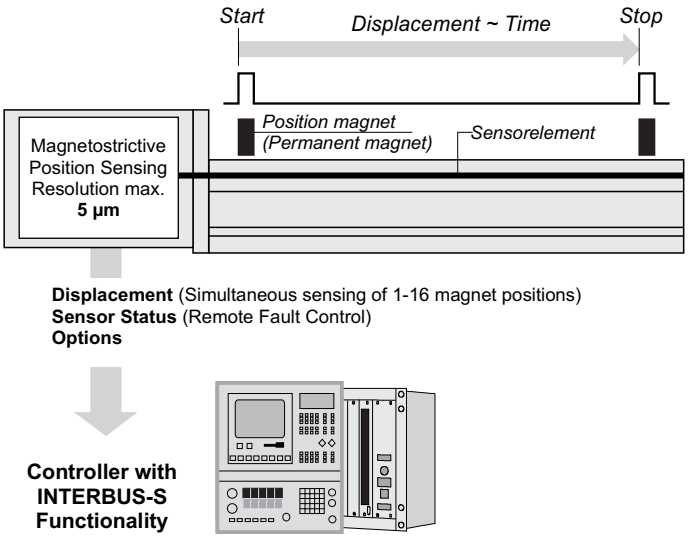

Temposonics R-Series, *Interbus-S / I 202*

Temposonics-RP (Profile), Measuring Range 25 - 5000 mm

Temposonics-RP sensors - a stable aluminum extruded profile - offer modular construction, flexible mounting configuration and easy installation. Position measurement is contactless via different versions of permanent magnets.

1. A captive sliding magnet running in profile housing rails. Connection with the mobile machine part is via a ball jointed arm.
2.The removable floating magnet, mounted directly on the mo-ving machine part, travels over the profile at a low distance.

Profile Mounting:
1. Sliding mounting feet
2. T-slot Nut M5 in base channel

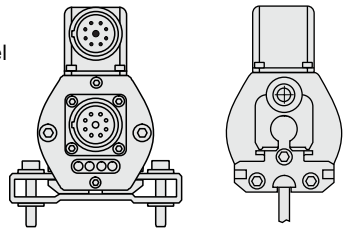

1) Type Temposonics RP-S..

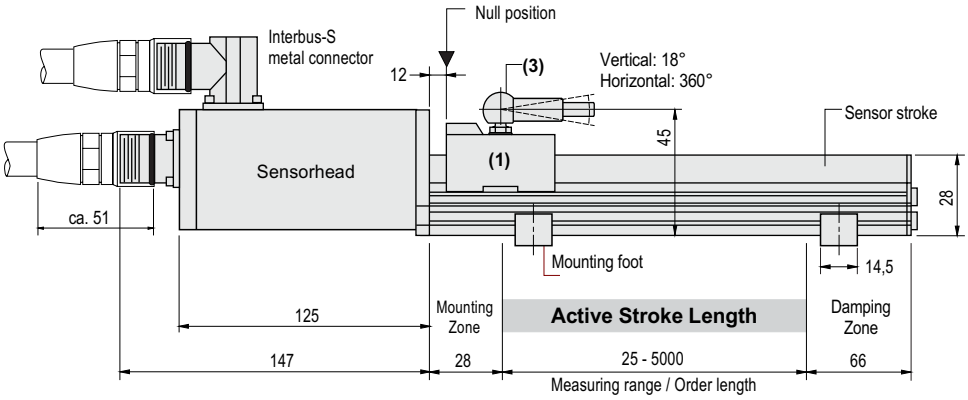

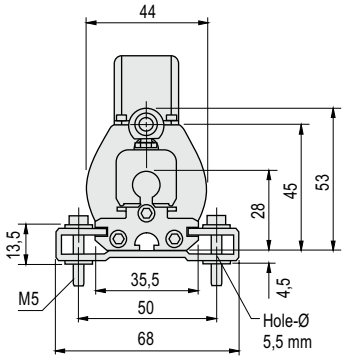

(1) Captive sliding magnet type S
(2) Captive sliding magnet type V
(3) Ball jointed arm, M5 thread
(4) Floating magnet type M
(5) Non-magnetic mounting plate and screws

CAUTION!
With all RP type sensors, the areas left and right of the stroke length are inactive (mounting area, damping) and should <u>not</u> be used for measurement. Nevertheless, the stroke length can be overtravelled.

2) Type Temposonics RP-V..

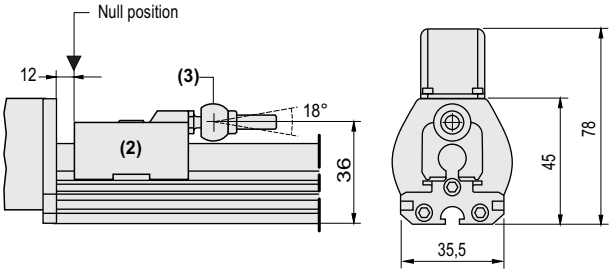

3) Type Temposonics RP-M..

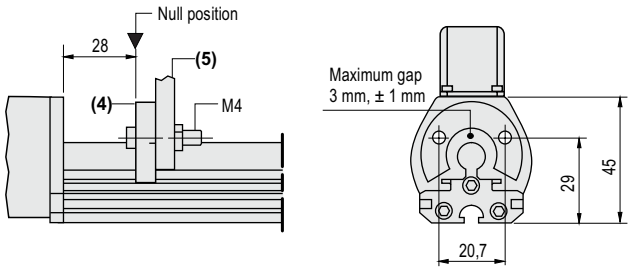

Position Magnets

Sliding magnet type »S«

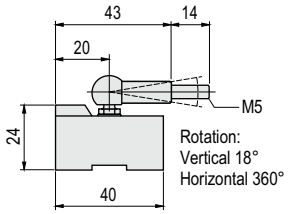

Part No. 252 182

Sliding magnet type »V«

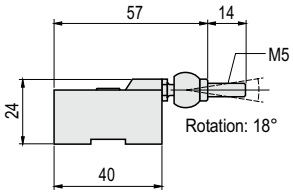

Part No. 252 184

Floating magnet »M«

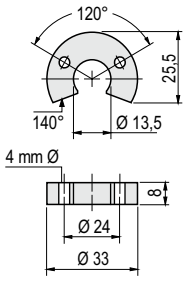

Part No. 251 416

Technical alterations reserved

Temposonics R-Series, *Interbus-S / I 202*

Temposonics-RH (Rod), Measuring Range 25 - 7600 mm

Temposonics-RH - the pressure proof stainless steel sensor - is designed for direct mounting in hydraulic cylinders. Position measurement is contactless via a permanent magnet (closed or open ring). It can also be mounted externally in many other industrial automation devices.

Mounting options:
With threaded flange
- M18 x 1,5
- 3/4" - 16UNF-3A

CAUTION!
With all RH type sensors, the areas left and right of the stroke length are inactive (mounting area, damping) and should <u>not</u> be used for measurement. Nevertheless, the stroke length can be overtravelled.

Temposonics-RH

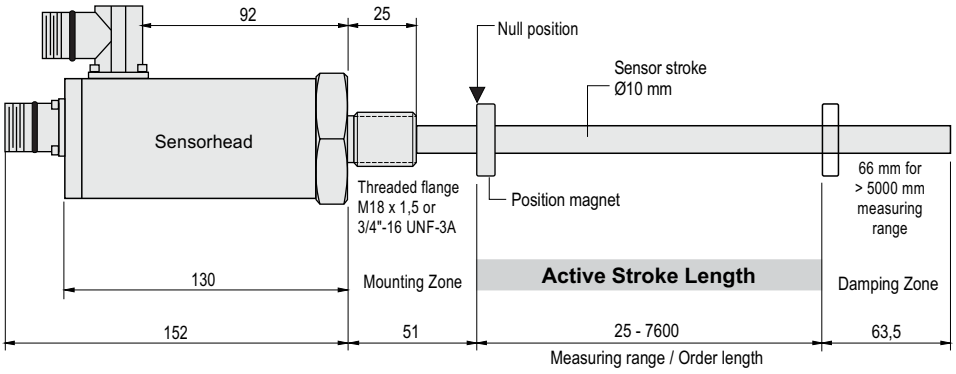

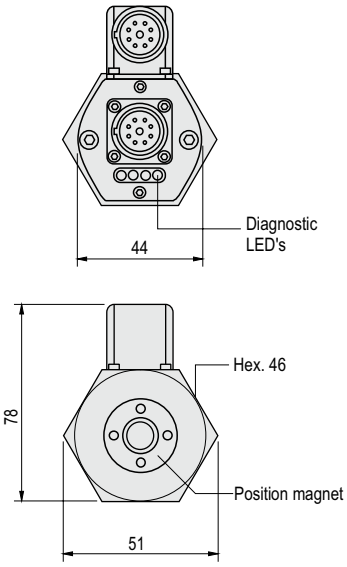

Types of Position Magnets

Ringmagnet Ø 33 mm
(Standard magnet)

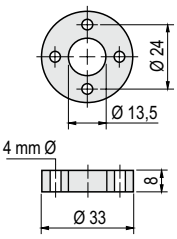

Part No. 201 542

Open Ringmagnet Ø 33 mm

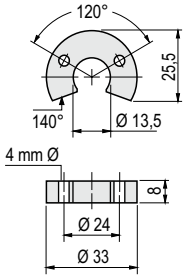

Part No. 251 416

Ringmagnet Ø 25,4
For stroke length ≤ 3050 mm

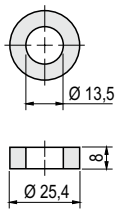

Part No. 400 533

Interbus Cable Connectors

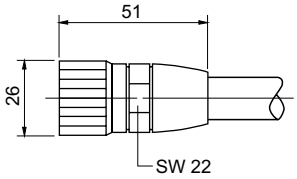

Housing	Metal shell
Termination	Solder
Contact insert	Female/male, silver plating
Cable clamp	Pg 9
Cable OD max.	10 mm

1) **9 pin female connector M23 - Part No. ST VRC LBL**
2) **9 pin male connector M23 - Part No. ST VRC LSR**

Technical alterations reserved

General

The sensor may be operated in any position. Normally, the sensor is firmly installed, whilst the magnet head is mounted at the mobile machine part and taken over the tube contactlessly.

Attention!
To avoid damaging of slider, magnet and sensor be aware of a careful parallel mounting of the transducer.

Profile Style Sensor

The sensor requires at least two mounting feet which simply slide on to the transducer and are held in place with screws M5 x 20 (DIN 6912) or M5 screws in base channel. Mount the floating style magnet using non-magnetic material and screws.

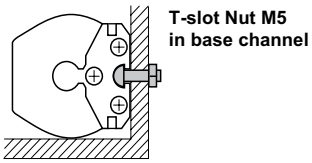

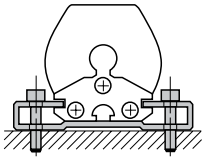

Mounting foot with machine screws M5 x 20 (Tightening torque < 1,1 Nm)

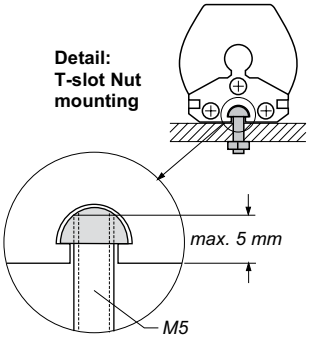

Open Magnet Type M, removable

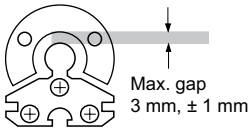

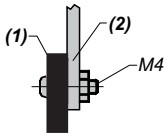

(1) Magnet
(2) Non-magnetic mounting plate and screws

Rod Style Sensor

The sensor can be mounted in any position. Note the minimum clearances (right). Use non-magnetic screws, supports etc. Sensors above 1000 mm measuring stroke may require mechanical supports.

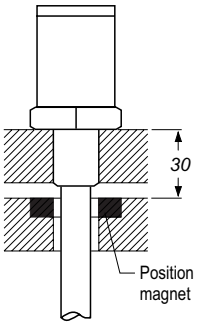

Non-magnetic Material

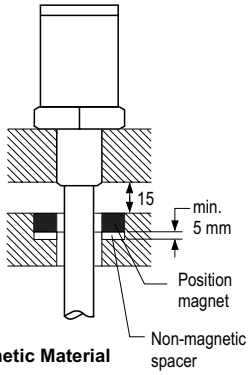

Magnetic Material

Example: Sensor Supports

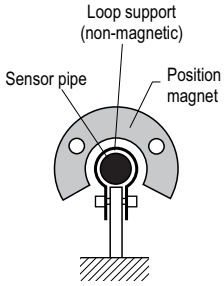

Cylinder Installation

The basic sensor unit comprising electronic head and sensing element is mounted in the high pressure sensor housing (flange with rod) with only 2 screws and fits into the piston rod. The magnet on the bottom of the piston floats contactlessly over the sensor rod and marks the measuring point through the rod wall. Due to this construction, the sensor tube is part of the cylinder and the hydraulic system has **not** to be **opened** in case of service.

When installing the sensor in hydrocylinders, note

- Magnet must not slide along the sensor tube
- The bore in the piston rod and type of sealing are determined by cylinder manufacturers as these depend on hydraulic pressure and piston velocity. We recommend 13 mm bore hole diameter at minimum and O-rings or copper gaskets for sealing
- Do not exceed peak pressure of 530 bar
- Protect sensor rod from wear

ATTENTION
After changement of sensor cartridge, the screws must be fastened with e.g. Loctite 243.

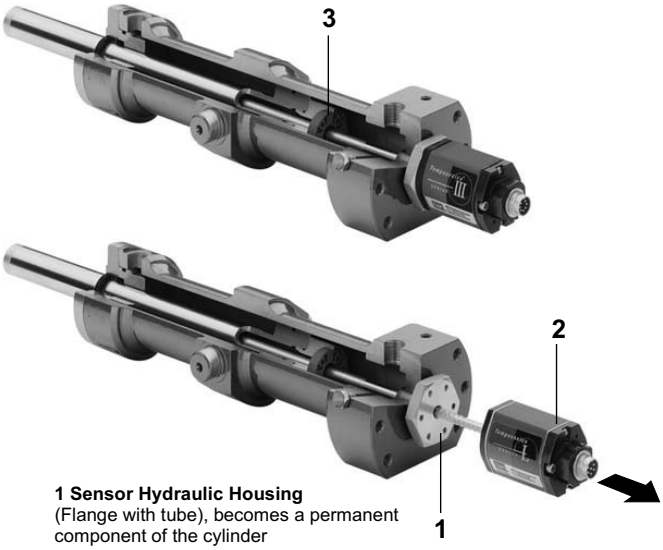

1 Sensor Hydraulic Housing
(Flange with tube), becomes a permanent component of the cylinder

2 Sensor Cartridge
(Electronic head + Sensing element): Easy to replace in the field with 2 screws Torx 20

3 Position magnet

Profile and Rod Sensors

IMPORTANT!
Temposonics sensors are active electronic systems. When installing the transducer it is essential that correct sensor connections are ensured.
Before turn-on, please, check if the sensor was connected correctly, in order to prevent destruction of the sensor electronics by voltage peaks or faulty connection.

CAUTION!
During wiring, disconnection from all voltage sources must be ensured.

To prevent interference affecting the electronic measuring equipment, the connecting cables must be installed with utmost care. Therefore,

1. Keep cables away from motor cables, frequency inverters, valves, pipings, relays, etc.
2. Avoid ground loops.
3. Use only stabilized power supplies.
4. Take care that the specified connection values are not exceeded.
5. Use only low-impedance, twisted pair and screened cables.

Bus Wiring

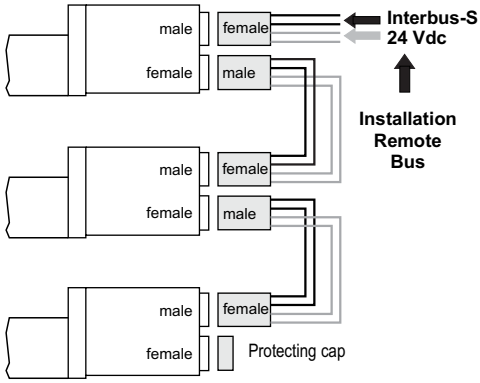

The Temposonics sensor with Interbus interface is set as slave, which contents data lines and the 24 Vdc input. Connectors, cable have to meet the Interbus norm as well as the wiring. A closed-loop-system is shown on the left. A 9 wire go-and-return line connects the different slaves when wiring the installa-tion remote bus. At the forwarding bus cable (connection via the lower female cable connector) PIN 9 has to be connected with PIN 5 on the cable connec-tor. The last slave does not need to be wired at the lower connector. Do not remove the protecting cap. The sensor embedded Interbus-Asic closes the Interbus-loop at this slave.

Connector Output

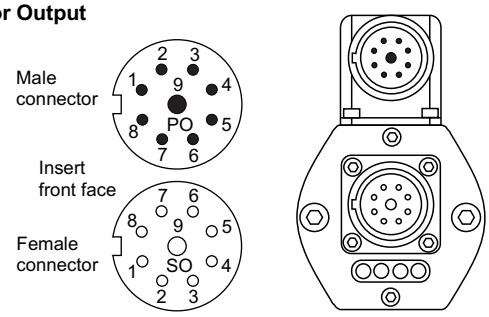

9 pin Interbus standard connectors M23
- 1 x 9 pin male connector (IN)
- 1 x 9 pin female connector (OUT)

Sensor Status Indication

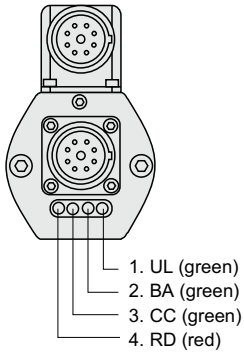

4 Diagnostic LED's

(placed on connector side)

1. UL: 24 Vdc turned on
2. BA: Bus activ
3. CC: Cable controlled
4. RD: Remote-Bus not in function

Connector Wiring

Male Connector (IN)

Pin	Signal
1	DO
2	$\overline{DO}$
3	DI
4	$\overline{DI}$
5	Gnd
6	PE
7	+24 Vdc
8	0 V
9	n.c.

Female Connector (OUT)

Pin	Signal
1	DO
2	$\overline{DO}$
3	DI
4	$\overline{DI}$
5	Gnd
6	PE
7	+24 Vdc
8	0 V
9	RBST

ATTENTION !
The sensor is equipped with mounting feet for isolation from machine ground. It is necessary that you apply ground to the sensor housing. Connection is made with the on the sensor head.

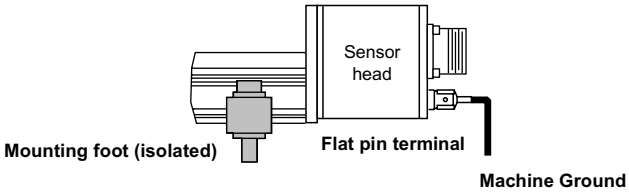

CE-Labeling.
The devices agree with the European Guideline 89/336/EEC (changed through 91/386/ECC and 93/44/ECC, "Electromagnetics Compatibility". The following European special basic standards will be fulfilled:
Electromagnetic Emission: EN 50081-1 and Electromagnetic Susceptibility: EN 50082-2

Mounting Instructions!
To fulfill the above mentioned basic standards require a prescribed standard cable.
Ensure that the sensor has a flawless machine grounding. The cable shield must be fixed to the cable connector and has to be connected to machine ground on the controller electronic side.

Operation Mode

R-Series sensors with Interbus-S output will support one or multiple position magnets.

1) 1-Magnet Sensor: provides one displacement output over the entire active range of the sensor's stroke length.

HERE:

2) Multiple-Magnet Sensor: provides up to 16 magnets on one sensor only along the active sensor stroke.

Note: A gap of at least 100 mm must be maintained between the magnets.

Sample

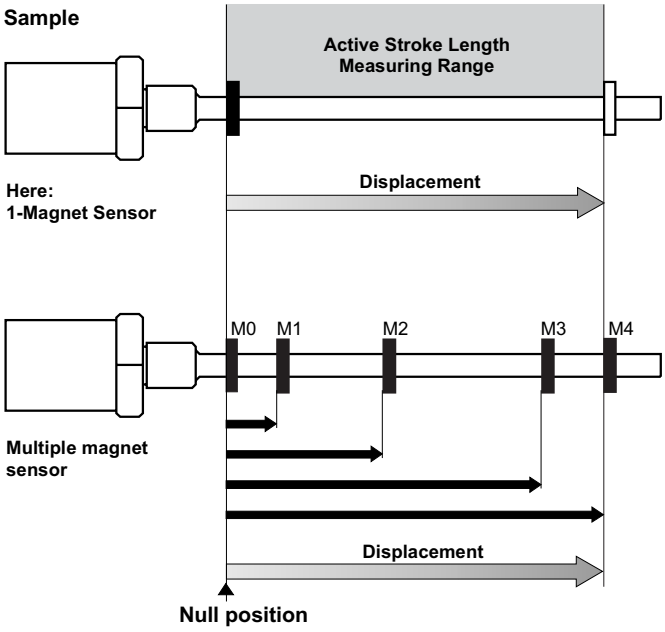

Temposonics-RH with Multi-Position Measurement

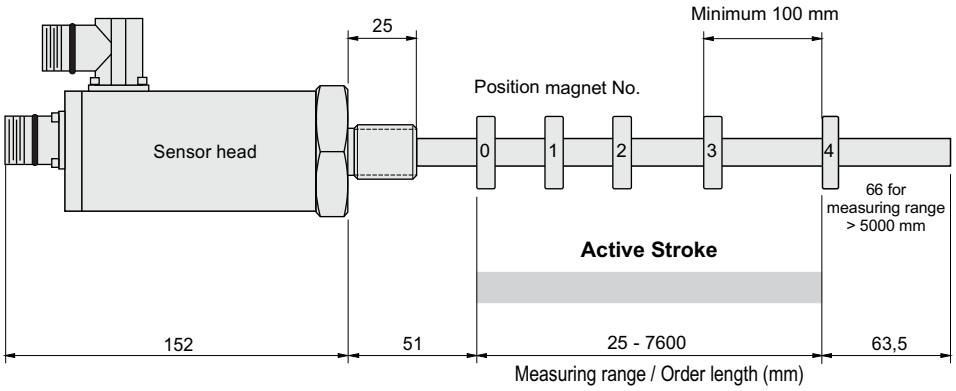

Product Specifications

Measured variable: Displacement, Multi-Position Measurement: 1 - 16 Magnets
Sensor data transfer: Absolute magnet position, Status and remote fault control, Magnet status
Programmable parameters: Null position (Offset and preset), Measurement direction, Resolution
Measurement transmission: Asynchronous
Interface: INTERBUS-S Installation Remote Bus, RS 485
Data format: INTERBUS-S (EN 50254, DIN E 19258)
Data length: 32 bit (2 words indata, 2 words outdata)
- Position: 24 bit,
- Controller and Status 8 bit

Baud rate: 500 kBit/s
Resolution: 0,005 bis >0,500 mm
Linearity tolerance: < ± 0,01 % F.S. (Minimum ± 40 µm)
Repeatability: < ± 0,001 % F.S. (Minimum ± 2,5 µm)
Measuring cycle time: 0,5 ms at 500 mm / 1,0 ms at 2000 mm
2,0 ms at 4500 mm / 3,2 ms at 7600 mm Meßlänge
Input voltage: 18 - 36 Vdc (Power consumption < 3W)
- Current drain: 70 mA typical
- Ripple: < 1 % peak to peak
- Electric strength: 500 V (DC ground to machine ground)

Electrical connection: 2 pcs. of 9 pin connector M23 (Interbus standard)
Certification: Certified by Interbus-S Club after conformance test of Fraunhofer Institute, Karlsruhe, Germany

Validity

The following description is valid for all R-Series Temposonics Multi-Position measurement sensors with Interbus-S interface (Profile or Rod style) with measuring ranges of 25 - 7600 mm.

Their model number is shown on each sensor type label with following ordering code (see right).

Position Sensor Temposonics

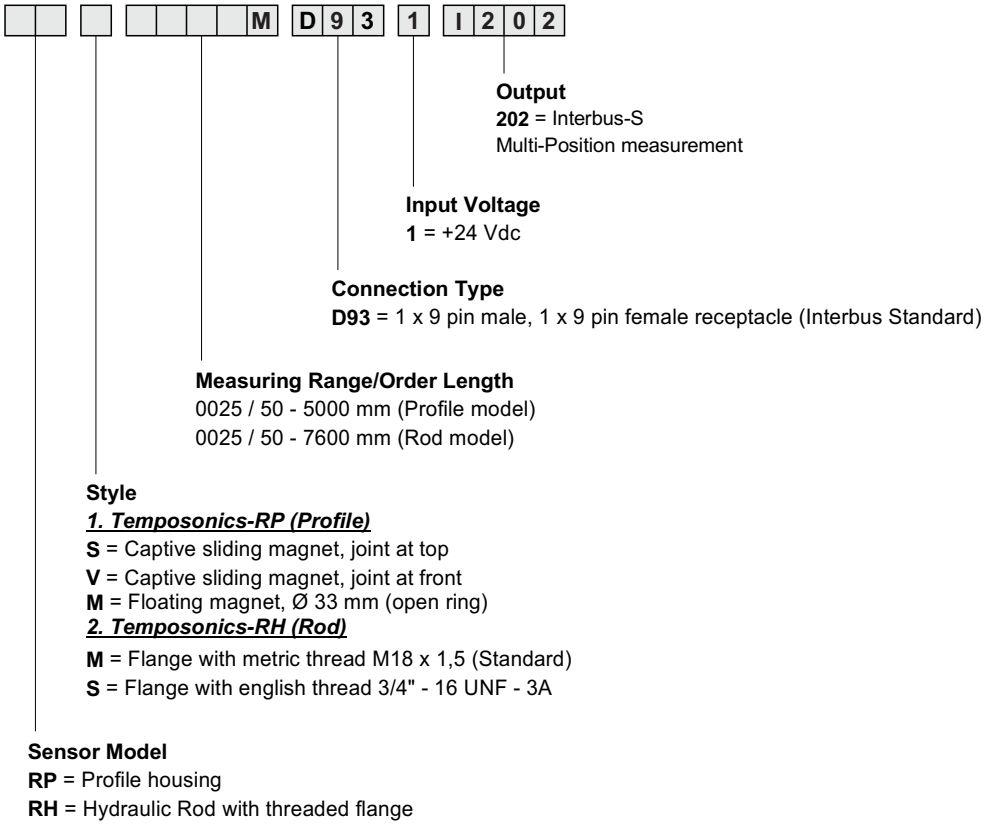

Software

1. Introduction

The Temposonics R-Series sensor with Interbus-S interface for Multi-Position Measurement is a remote bus slave with 64 bits I/O data. The slave ID code is 51 decimal. The input data determine the number of the measuring magnets. Magnet numbering starts at sensors head (see page 8) with # 0. The sensor delivers three 16 bits values for each selected magnet.
A minimum number of magnets can be setup. Errors are signalized by setting the bit 61 (e.g. the sensor recognized less than named magnets).
A set bit 63 in the input data, activates the programming mode which is compatible to the 1-Magnet Position measurement in using the higher 32 bits. The successful performance of a command is indicated by copying the input data into the output data. Additionally, on read commands the bits 32-55 contain the required information. Again errors are signalized by setting bit 61.
Again errors are signalized by setting the bit 29.

Bit definition of Process Data

Bit No.	Name	Function
63	Mode bit	1 = Program / 0 = Measure
62	Direction bit	1 = Write / 0 = Read
61	Error bit	1 =Error / 0 = No Error
60	Accessbit	1 = Factory Access / 0 = Custom Access
59 - 56	Codenibble 1	Selection magnet # for position 1
55 - 52	Codenibble 2	Selection magnet # for position 2
51 - 48	Codenibble 3	Selection magnet # for position 3
47 - 32	Position 1	Position value of selected magnet # 1
31 - 16	Position 2	Position value of selected magnet # 2
15 - 0	Position 3	Position value of selected magnet # 3

2. Programming Mode

2.1 Configuration read / write

Data format:
80 xx xx xx - Read configuration
C0 aa aa aa - Write configuration A

Multi-Position Measurement - Data format bit identification

Bit 55 - Bit 52
• Name: Reserved for future applications
• Value range: 0 - F
• Standard value: 1

Bit 51 - Bit 48
• Name: Defines minimum magnet number
• Value range: 0 - F
• Standard value: 0
• Examples: 0 = Error for magnet # <1, 9 = Error for magnet # < 10

Bit 47 - Bit 32
• Name: Defines resolution
• Value range: 0000 - FFFF
• Standard value: 0005
• Examples: 0064 = 1/10 mm, FF9C = -1/10 mm (Inverse measurement direction)

The configuration entry sets the parameters for resolution and magnet numbers. The minimum magnet number defines an error value range (see above). Zero means position data read out of an identified magnet.
The resolution defines the dimension represented by one LSB in 1/1000 mm. So the value 00FE sets the LSB to 1/100 inch.
A negative integer (FFFB = -5) results in an inversion of the measurement direction so that the values increase in the direction of the sensor head.

2.1 Offset read / write

Data format:
81 xx xx xx - Read offset
C1 aa aa aa - Write offset A

The offset allows to adjust the sensor with an absolute value. Especially if the a constant shift is required it is useful to evaluate the offset and program it into the sensor. An offset 0003E8 means that thousand LSB are added to the position value.
The corresponding distance depends on the chosen resolution. Negative offsets are possible too, e.g. FFFF9C = -100.
The standard value of the offset is 00 00 00.

2.2 Preset function

Data format:
C8 aa aa aa - Preset to A

This function is similar to the offset function, certainly through the actual position value of magnet # 0. The difference is that the actual position value is used too. The offset is modified to meet the preset value. This offers an easy teach-in adjustment.

2.3 Store in EEPROM

Data format:
CE 45 45 50 - Write actual adjustments into EEPROM

All changes are used as soon as the sensor returns to the measurement mode. But they will get lost when the power is switched off. To avoid this use the store in EEPROM command. The values are stored into the nonvolatile EEPROM and reloaded on each power up. Note that the guaranteed number of EEPROM write cycles is 100,000.

2.4 Switch back to standard values

Data format:
CF 53 54 44 - Set the adjustment to standard values

This command sets the configuration and the offset (and all future functions) back to standard values.

MTS and Temposonics® are registered trademarks of MTS Systems Corporation. All other trademarks are the property of their respective owners. Printed in Germany.
Copyright © 2013 MTS Sensor Technologie GmbH & Co. KG. Alterations reserved. All rights reserved in all media. No license of any intellectual property rights is granted. The information is subject to change without notice and replaces all data sheets previously supplied. The availability of components on the market is subject to considerable fluctuation and to accelerated technical progress. Therefore we reserve the right to alter certain components of our products depending on their availability. In the event that product approbations or other circumstances related to your application do not allow a change in components, a continuous supply with unaltered components must be agreed by specific contract.

MTS®
SENSORS

MTS Sensor Technologie GmbH & Co. KG
Auf dem Schüffel 9
58513 Lüdenscheid, Germany
Tel. + 49-23 51-95 87 0
Fax + 49-23 51-5 64 91
E-Mail: info@mtssensor.de
www.mtssensor.de

MTS Systems Corporation
Sensors Division
3001 Sheldon Drive
Cary, N.C. 27513, USA
Tel. + 1-919-677-0100
Fax + 1-919-677-0200
E-Mail: sensorsinfo@mts.com
www.mtssensors.com

MTS Sensors Technology Corp.
737 Aihara-cho,
Machida-shi, Japan
Tel. + 81-42-775-3838
Fax + 81-42-775-5516
E-Mail: info@mtssensor.co.jp
www.mtssensor.co.jp